Unit 6 Lesson 16: Graphing from the Vertex Form

1 Math Talk: When x Is -7 (Warm up)

Student Task Statement

Evaluate each expression when x is -7:

$x + 4$

$(x + 4)^2$

-$(x + 4)^2$

-$(x + 4)^2 + 5$

2 Four Functions

Student Task Statement

1. Complete the table of values for each function.
   $f(x) = (x - 4)^2$

x	0	1	2	3	4	5	6	7
$f(x)$								

   $g(x) = -(x - 4)^2$

x	0	1	2	3	4	5	6	7
$g(x)$								

2. Use the completed tables to answer these questions:
   a. What are the coordinates of the vertex of each graph? How can you tell?

   b. Does the graph of function f open up or down? How can you tell?

   c. Does the graph of function g open up or down? How can you tell?

3. Suppose function h is defined by $h(x) = (x - 4)^2 + 5$ and function j is defined by $j(x) = -(x - 4)^2 + 5$. Make predictions about the graph of each function using the questions here. If you get stuck, try creating a tables of values.
   a. What are the coordinates of the vertex of the graph of h and j?

   b. Which way—up or down—does the graph of each function open? How do you know?

3 Four More Functions

Student Task Statement

Here are some tables of values that represent quadratic functions.

x	2	3	4	5	6	7	8
$t(x)$	-11	-2	1	-2	-11	-26	-47

x	-2	-1	0	1	2	3	4
$u(x)$	13	4	1	4	13	28	49

x	-1	0	1	2	3	4	5
$v(x)$	76	49	28	13	4	1	4

x	-4	-3	-2	-1	0	1	2
$w(x)$	-47	-26	-11	-2	1	-2	-11

1. Make a rough sketch of a graph of each function. Label the vertex of each graph with its coordinates.

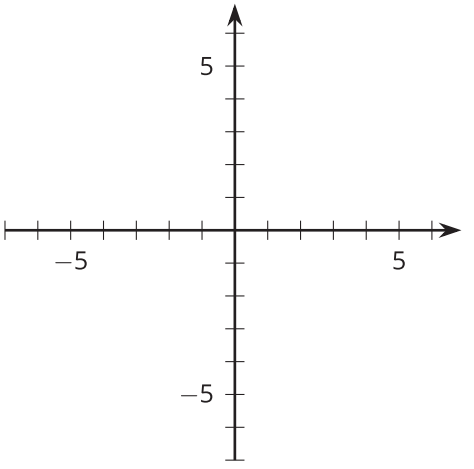

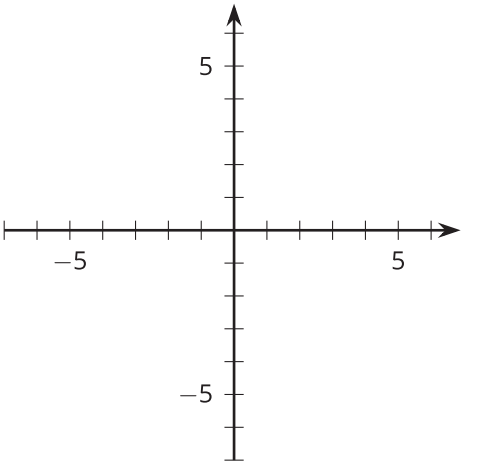

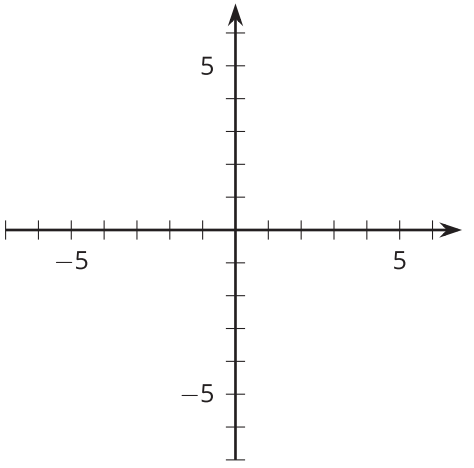
5
−5
5
−5

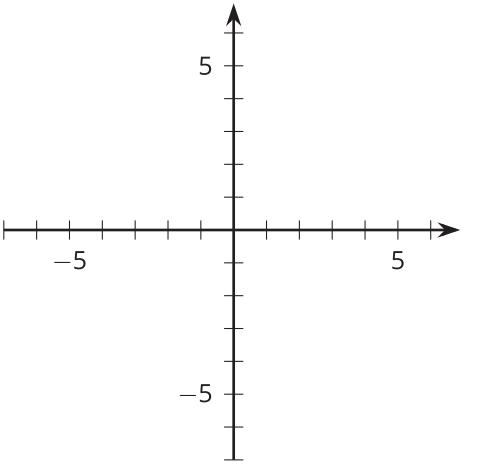
5
−5
5
−5

2. Here are some expressions that define quadratic functions. Match each function t, u, v, and w with an expression that defines it.
   a. $3x^2 + 1$
   b. $-3(x - 4)^2 + 1$
   c. $3(x - 4)^2 + 1$
   d. $-3x^2 + 1$

Activity Synthesis

The x-coordinate of the vertex is 4.

$y = 3(x - 4)^2 + 5$

A positive value indicates the graph opens up.

The y-coordinate of the vertex is 5.

The x-coordinate of the vertex is -4.

$y = -3(x + 4)^2 - 5$

A negative value indicates the graph opens down.

The y-coordinate of the vertex is -5.