Lesson 16: Surface Area of Right Prisms

Let's look at the surface area of prisms.

16.1: Multifaceted

Your teacher will show you a prism.

1. What are some things you could measure about the object?

2. What units would you use for these measurements?

16.2: So Many Faces

Here is a picture of your teacher's prism:

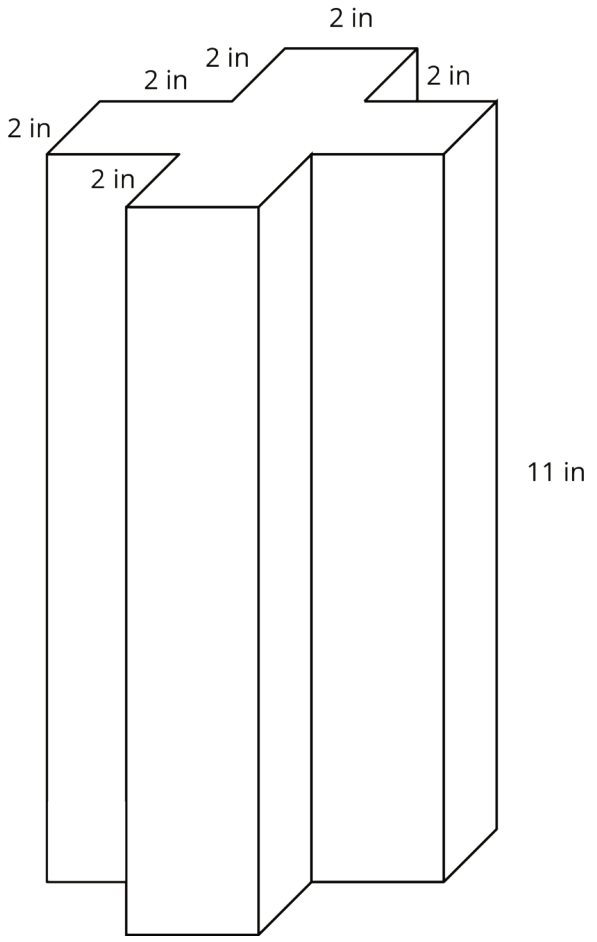

Three students are trying to calculate the **surface area** of this prism.

- Noah says, “This is going to be a lot of work. We have to find the areas of 14 different faces and add them up.”
- Elena says, “It’s not so bad. All 12 rectangles are identical copies, so we can find the area for one of them, multiply that by 12 and then add on the areas of the 2 bases.”
- Andre says, “Wait, I see another way! Imagine unfolding the prism into a net. We can use 1 large rectangle instead of 12 smaller ones.”

1. Do you agree with any of them? Explain your reasoning.

2. How big is the “1 large rectangle” Andre is talking about? Explain or show your reasoning. If you get stuck, consider drawing a net for the prism.

3. Will Noah's method always work for finding the surface area of any prism? Elena's method? Andre's method? Be prepared to explain your reasoning.

4. Which method do you prefer? Why?

16.3: Revisiting the Box of Chocolates

The other day, you calculated the volume of this heart-shaped box of chocolates.

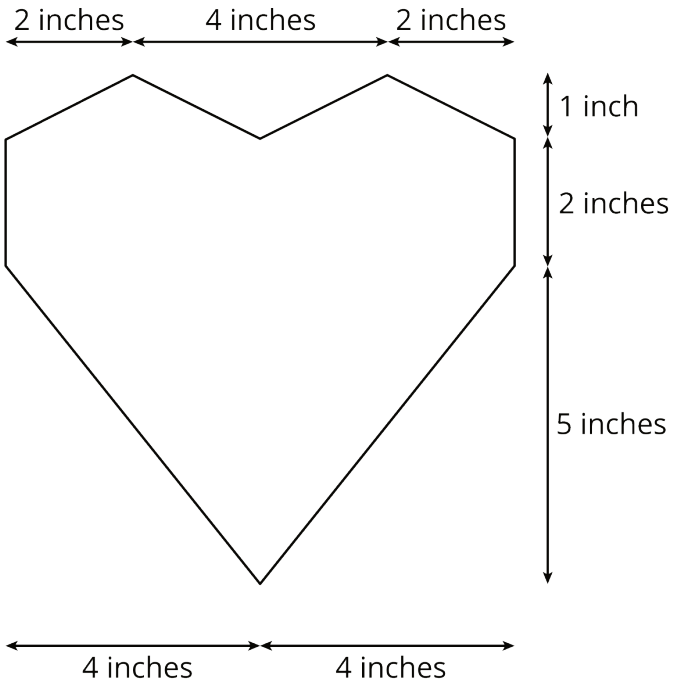

The depth of the box is 2 inches. How much cardboard is needed to create the box?

16.4: A Wheelbarrow of Concrete

A wheelbarrow is being used to carry wet concrete. Here are its dimensions.

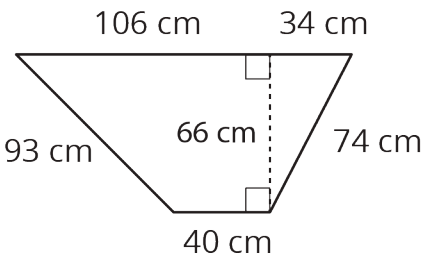

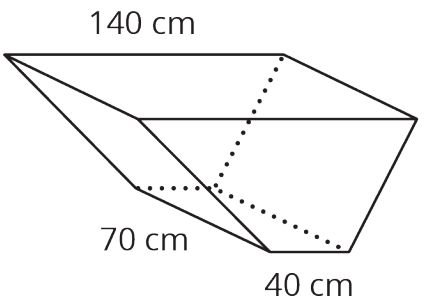

1. What volume of concrete would it take to fill the tray?

2. After dumping the wet concrete, you notice that a thin film is left on the inside of the tray. What is the area of the concrete coating the tray? (Remember, there is no top.)

Lesson 16 Summary

To find the surface area of a three-dimensional figure whose faces are made up of polygons, we can find the area of each face, and add them up!

Sometimes there are ways to simplify our work. For example, all the faces of a cube with side length s are the same. We can find the area of one face, and multiply by 6. Since the area of one face of a cube is s^2, the surface area of a cube is $6s^2$.

We can use this technique to make it faster to find the surface area of any figure that has faces that are the same.

For prisms, there is another way. We can treat the prism as having three parts: two identical bases, and one long rectangle that has been taped along the edges of the bases. The rectangle has the same height as the prism, and its width is the perimeter of the base. To find the surface area, add the area of this rectangle to the areas of the two bases.

When working with prisms, sometimes we need to find the volume and sometimes we need to find the surface area.

Here are some examples of quantities related to volume:

- How much water a container can hold
- How much material it took to build a solid object

Volume is measured in cubic units, like in^3 or m^3.

Here are some examples of quantities related to surface area:

- How much fabric is needed to cover a surface
- How much of an object needs to be painted

Surface area is measured in square units, like in^2 or m^2.